Data sheet
Kanopé

J56009

Proludic

2+ | 80 | 2,97m

1 = 17,89m
2 = 5,68m
3 = 5,8m

Physical inclusion
Sensory inclusion
Cognitive inclusion

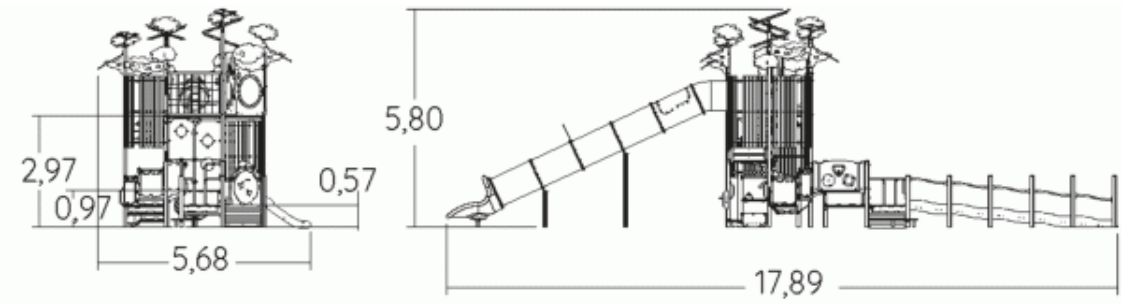

Play value : 56

role play	sliding	meeting	resting	handling	swinging	hiding	balancing
x3	x2	x5	x3	x7	x3	x1	x1

thinking	sound stimulation	tactile stimulation	visual stimulation	climbing	getting across
x2	x2	x8	x12	x6	x1

Data sheet
Kanopé

J56009

Components

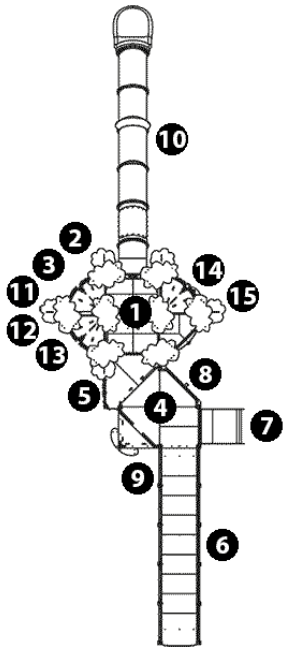

1. Plate-forme Kayop inclusive Ht : 2.97 m
2. Poteau sonore
3. Escalier transfert demi tour
4. Plate-forme transfert Ht : 0.97 m
5. Panneau ludique sensoriel
6. Plate-forme fauteuil Ht : 0.97 m
7. Toboggan large Ht : 0.57 m
8. Butterfly play panel
9. Plateforme accès
10. Toboggan tubulaire avec hublot Ht : 2,97 m
11. Assises suspendues 3 places
12. Shop
13. Panneau Smiley
14. Labyrinthe Kanopé
15. Play porthole

Installation of equipment

IMPORTANT: It is essential to refer to the installation instructions for information on the size of the safety areas.

Impact area (minimum normative surface)

Free space

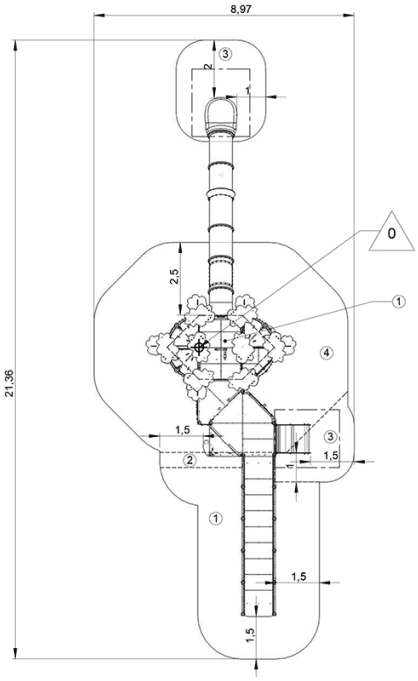

1	0,6m	33,5m²
2	0,97m	1,5m²
3	1m	15m²
4	2,97m	49m²

3	30h00	2.8m³	99m²	2732kg	41kg

EN 1176